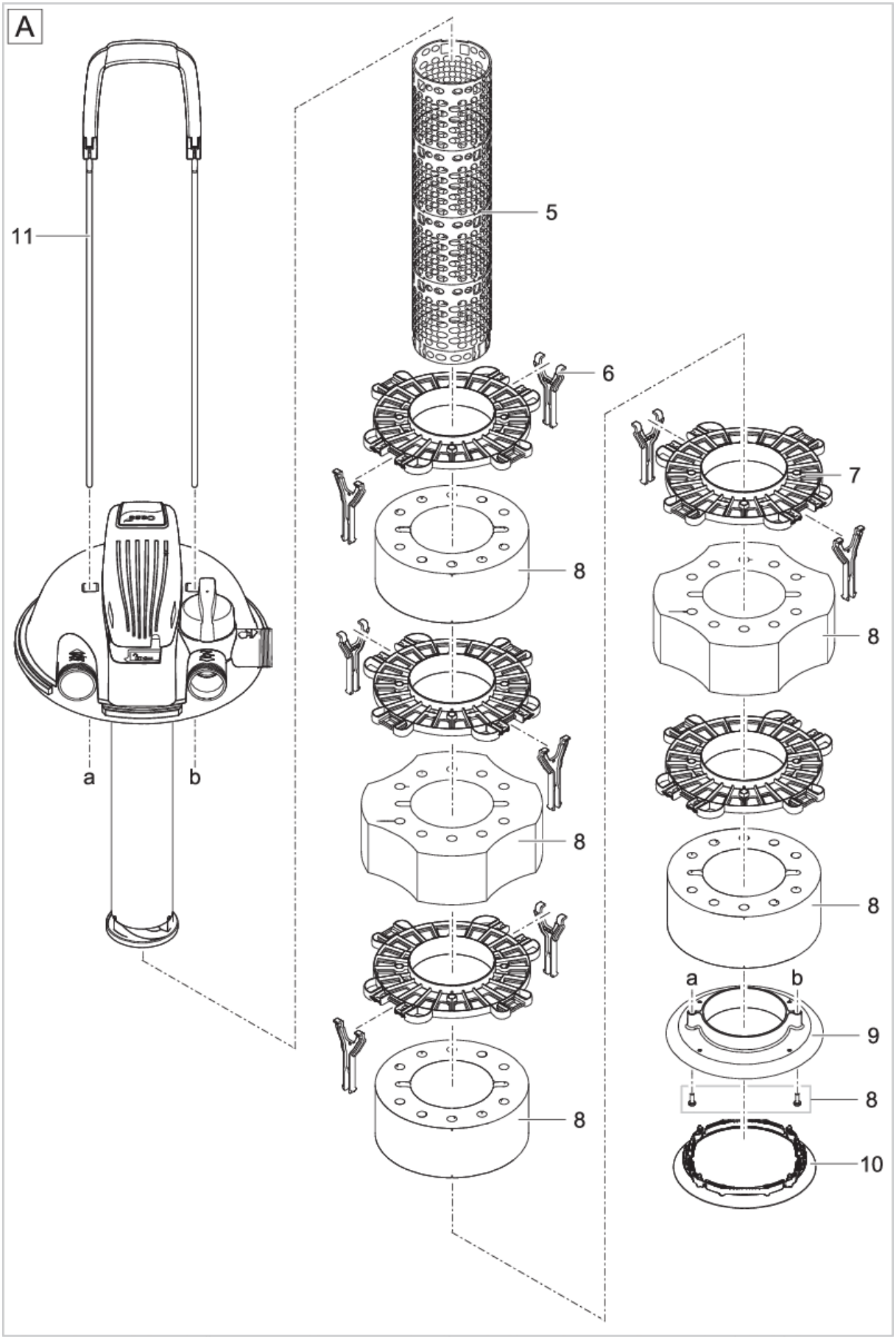
A
11
5
6
7
8
8
8
8
8
a
b
a
b
9
8
10