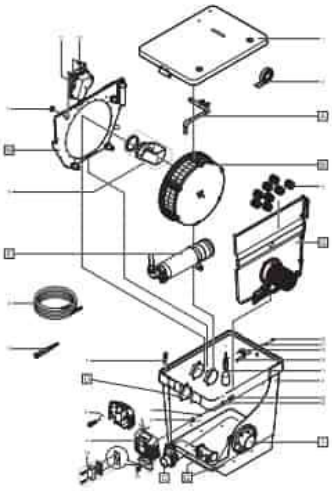

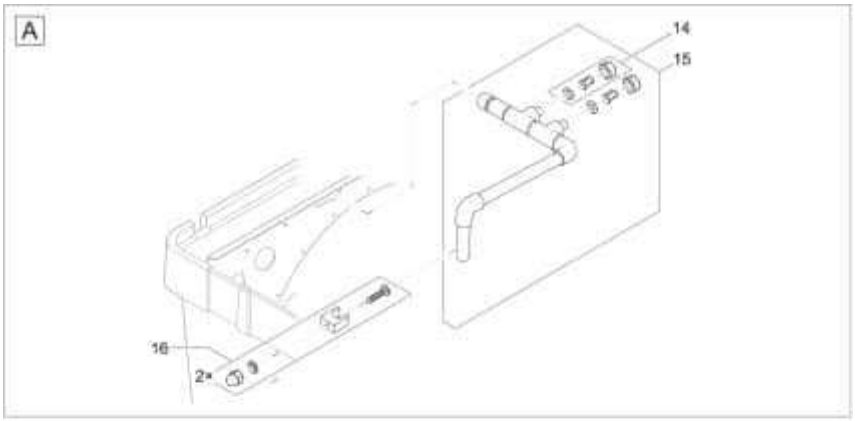
A
14
15
16
2×

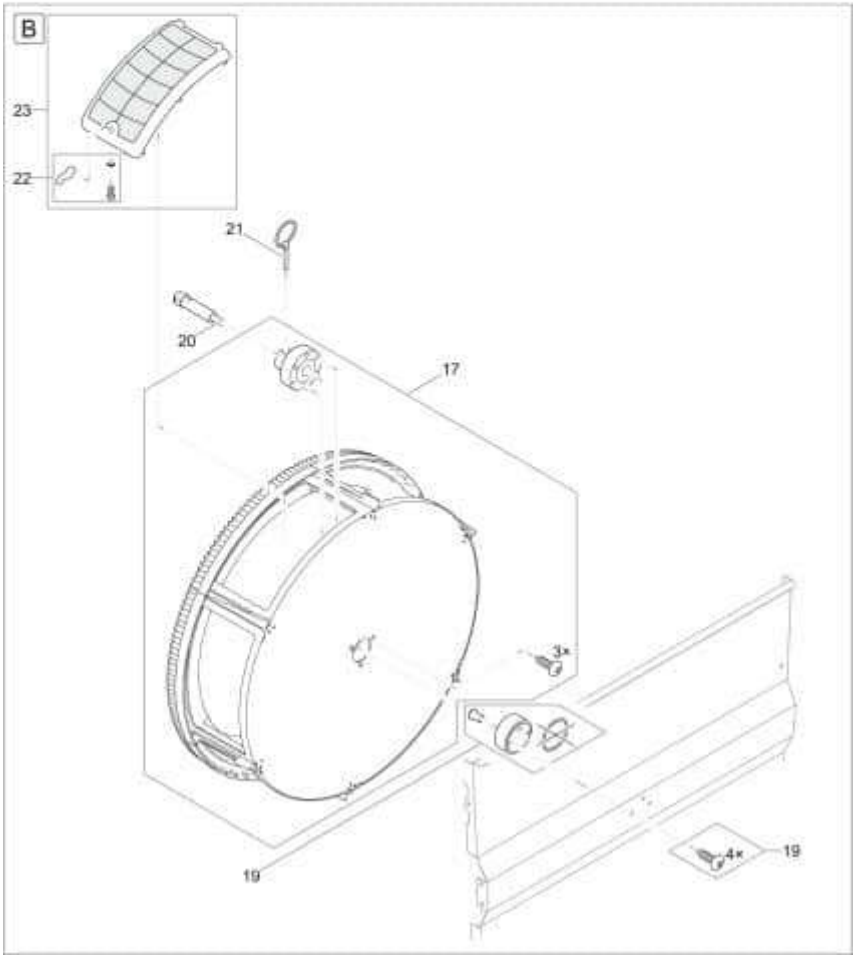
B
23
22
21
20
17
3×
19
4×
19

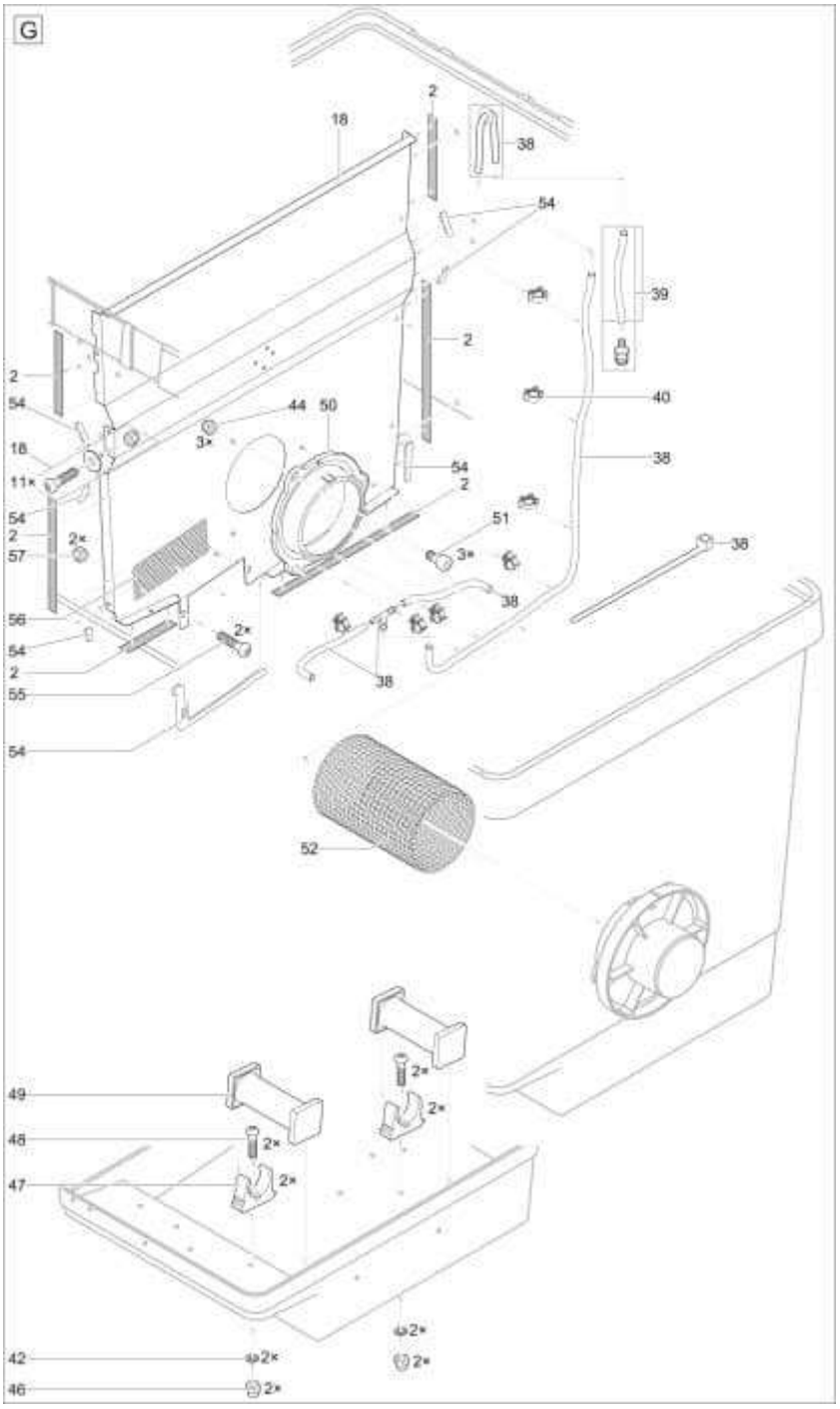
G
2
18
38
54
39
2
40
2
54
44
50
3×
18
11×
54
2
54
38
2
51
2×
57
3×
38
38
56
2×
54
2
38
55
54
52
2×
49
2×
48
2×
47
2×
2×
42
2×
2×
46
2×

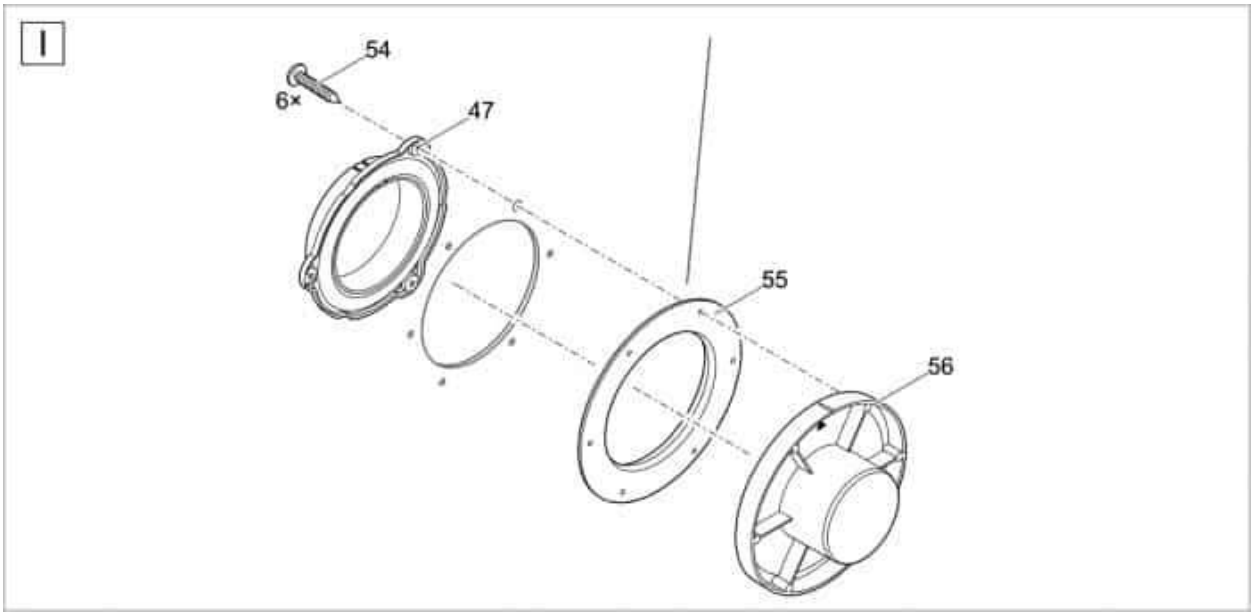
I
54
6×
47
55
56

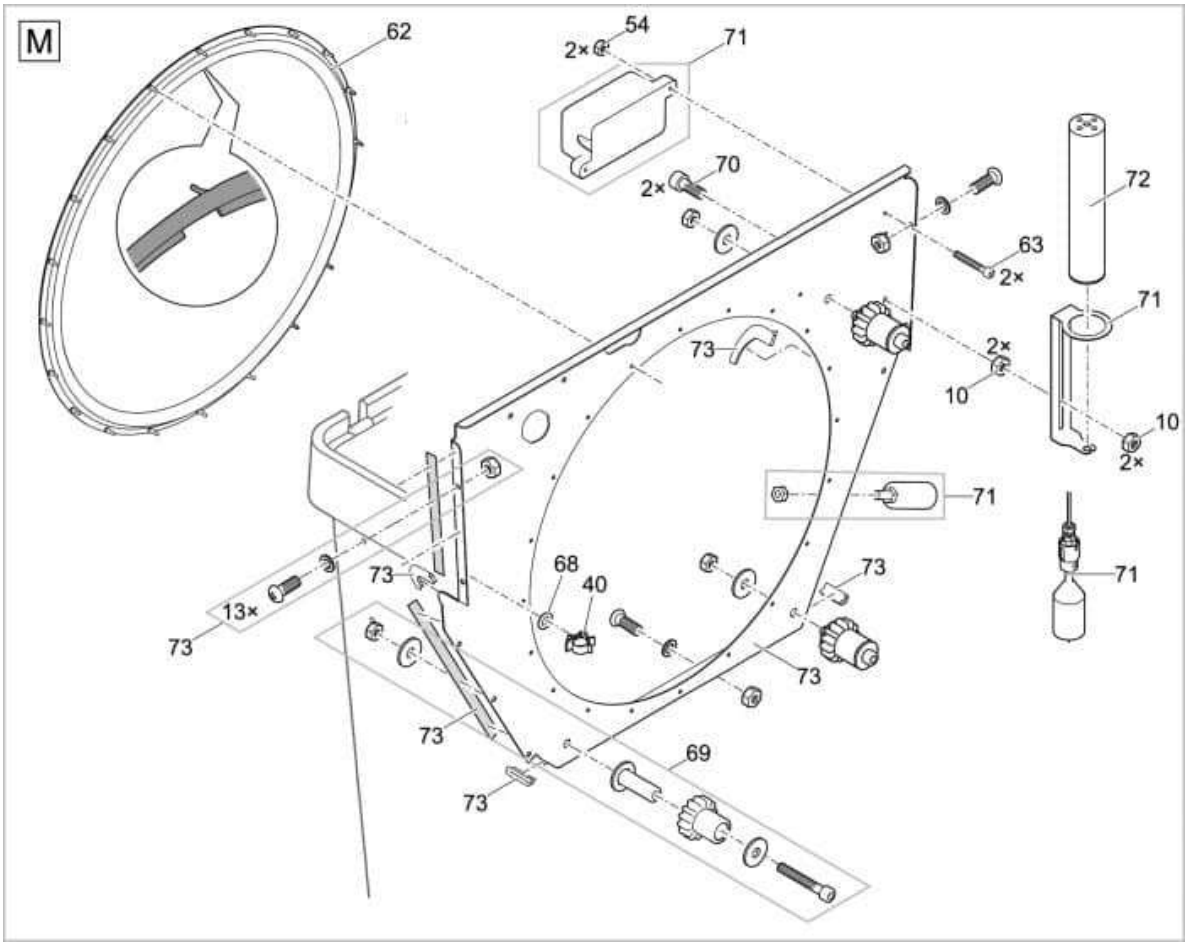
M
62
54
2×
71
70
2×
72
63
2×
71
73
2×
10
10
2×
71
71
73
68
40
73
13×
73
73
73
73
69
73