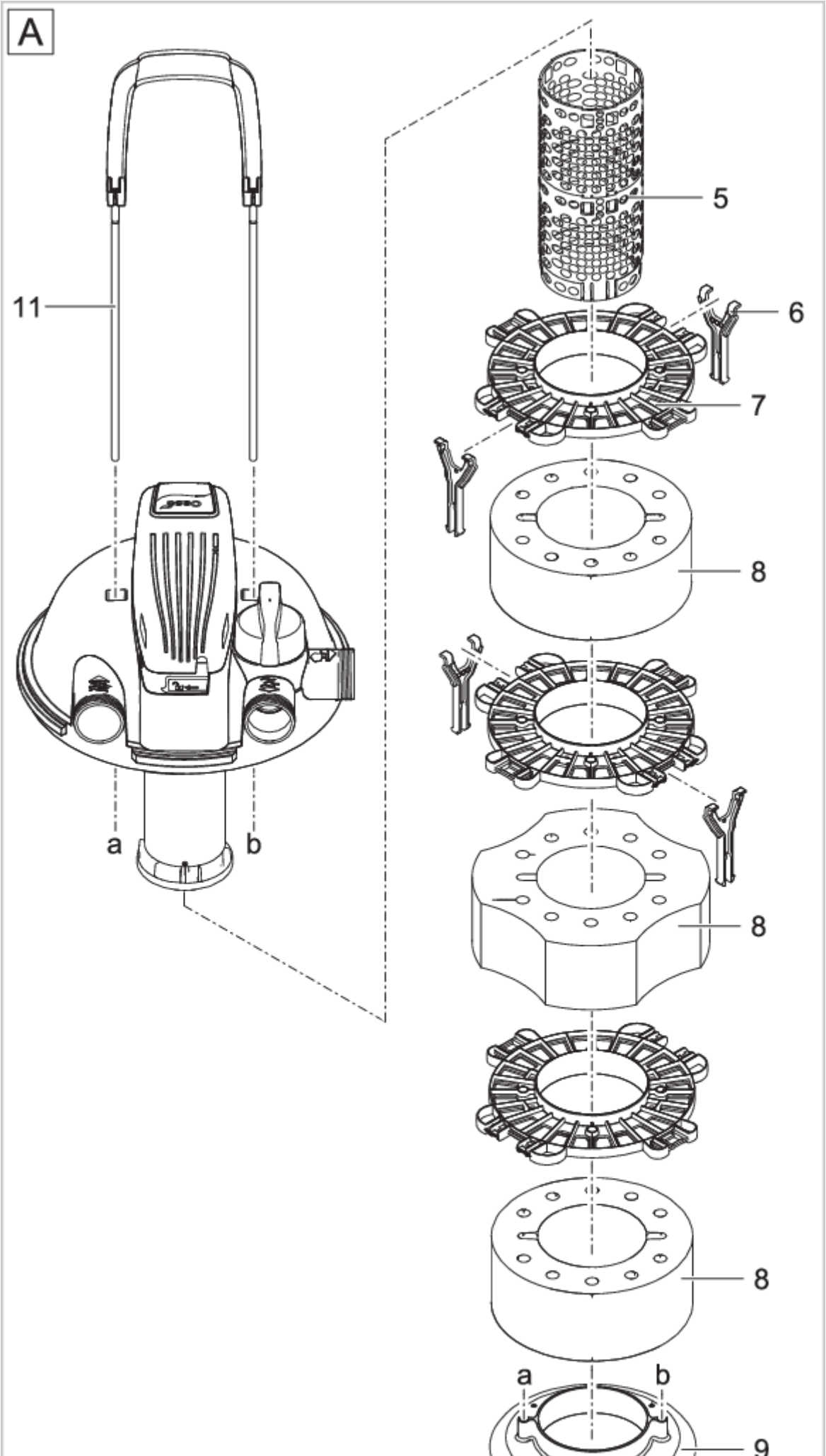
A
11
a
b
5
6
7
8
8
8
a
b
9